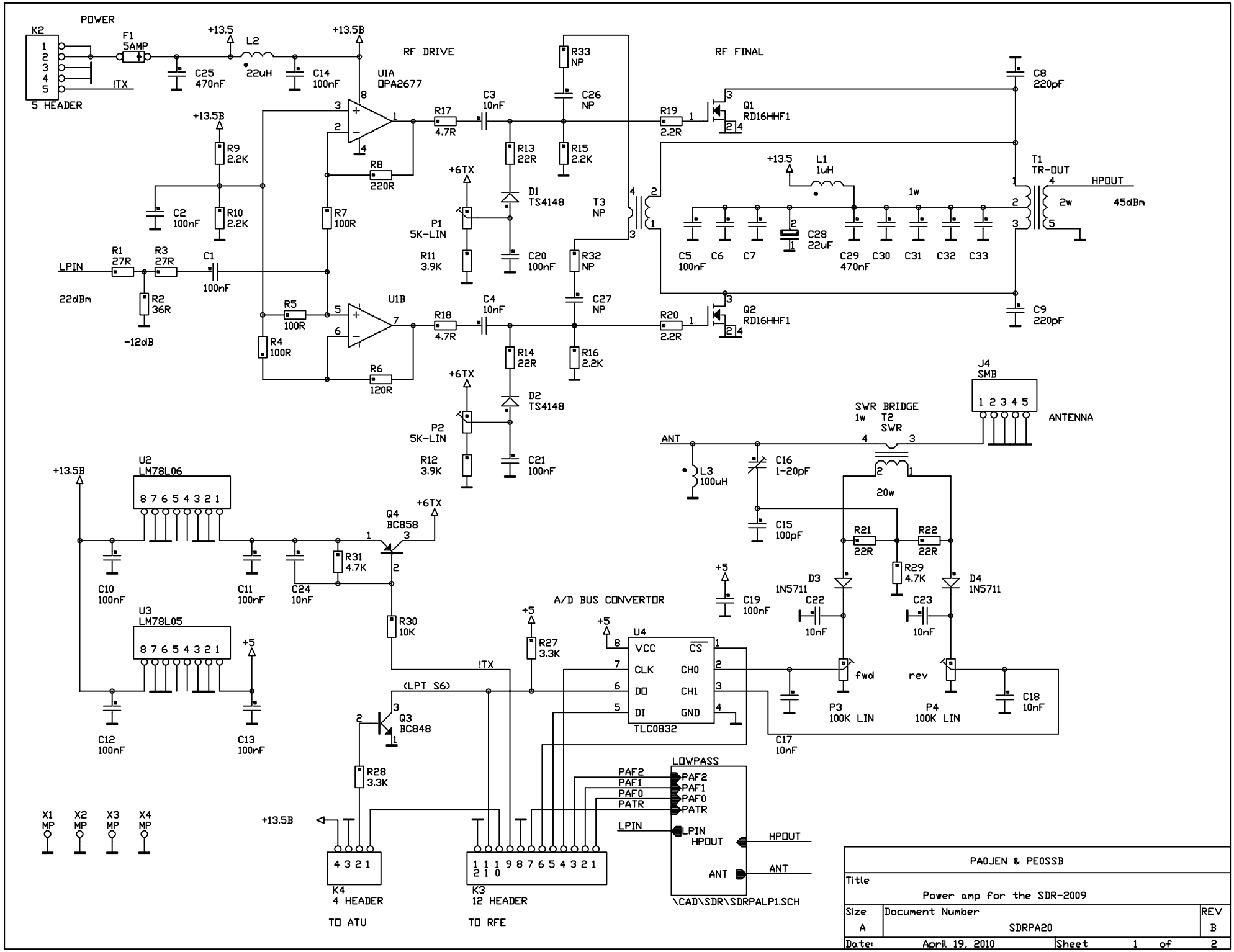
POWER
K2
5 HEADER
F1
5AMP
!TX
+13.5
L2
22uH
+13.5B
C25
470nF
C14
100nF
RF DRIVE
U1A
OPA2677
R9
2.2K
R10
2.2K
C2
100nF
R8
220R
R7
100R
R17
4.7R
C3
10nF
R13
22R
D1
TS4148
+6TX
P1
5K-LIN
R11
3.9K
C20
100nF
R33
NP
C26
NP
R15
2.2K
T3
NP
R32
NP
C27
NP
R16
2.2K
R14
22R
D2
TS4148
P2
5K-LIN
R12
3.9K
C21
100nF
RF FINAL
R19
2.2R
Q1
RD16HHF1
R20
2.2R
Q2
RD16HHF1
C8
220pF
C9
220pF
L1
1uH
1w
C28
22uF
C5
100nF
C6
C7
C29
470nF
C30
C31
C32
C33
T1
TR-OUT
HPOUT
2w
45dBm
LPIN
R1
27R
R3
27R
C1
100nF
22dBm
R2
36R
-12dB
R5
100R
R4
100R
U1B
R18
4.7R
C4
10nF
R6
120R
J4
SMB
ANTENNA
SWR BRIDGE
1w T2
SWR
20w
ANT
L3
100uH
C16
1-20pF
C15
100pF
R21
22R
R22
22R
R29
4.7K
D3
1N5711
D4
1N5711
C22
10nF
C23
10nF
C19
100nF
+5
U2
LM78L06
C10
100nF
C11
100nF
C24
10nF
R31
4.7K
Q4
BC858
R30
10K
U3
LM78L05
C12
100nF
C13
100nF
A/D BUS CONVERTOR
U4
VCC
CS
CLK
CH0
DO
CH1
DI
GND
TLC0832
R27
3.3K
(LPT S6)
Q3
BC848
R28
3.3K
C17
10nF
fwd
rev
P3
100K LIN
P4
100K LIN
C18
10nF
LOWPASS
PAF2
PAF1
PAF0
PATR
LPIN
HPOUT
ANT
\CAD\SDR\SDRPALP1.SCH
X1
MP
X2
MP
X3
MP
X4
MP
K4
4 HEADER
TO ATU
K3
12 HEADER
TO RFE
PA0JEN & PE0SSB
Title
Power amp for the SDR-2009
Size
A
Document Number
SDRPA20
REV
B
Date:
April 19, 2010
Sheet
1
of
2