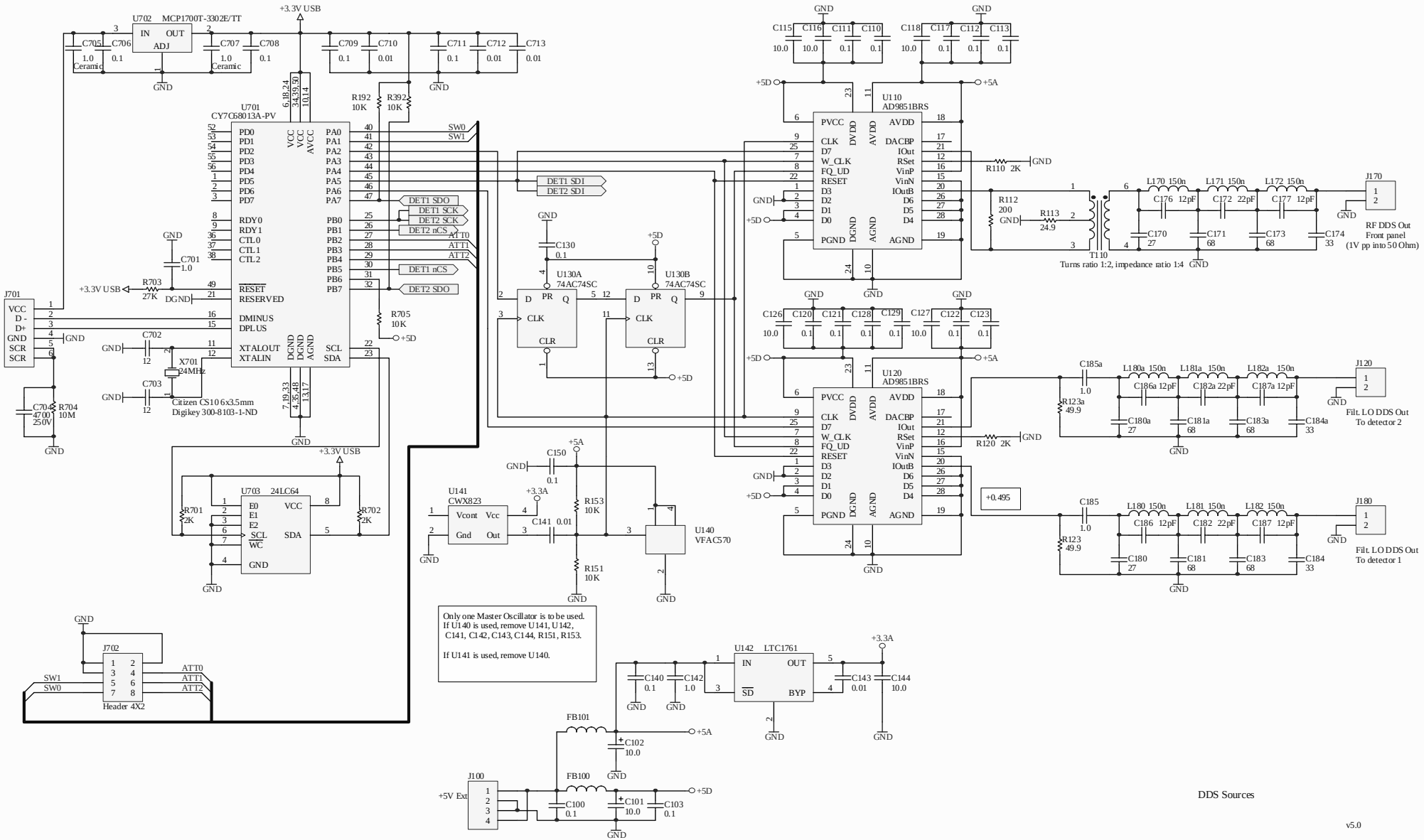

DDS Sources

v5.0

Ivan Makarov